DESIGN AND ANALYSIS OF SOLAR THERMAL PROPULSION SYSTEM FOR SMALL SATELLITE

A PROJECT REPORT

Submitted by

Kapil Dubey (RA1811019010126)
Nichiren Gyal Gurung (RA1811019010096)
Animesh Donikar (RA1811019010128)

Under the guidance of

Mr. G. Saravanan, Assistant Professor (S.G)
Department of Aerospace Engineering

in partial fulfillment for the award of the degree of

BACHELOR OF TECHNOLOGY
in
AEROSPACE ENGINEERING
of

FACULTY OF ENGINEERING & TECHNOLOGY

S.R.M. Nagar, Kattankulathur, Chengalpattu District
MAY 2022

SRM INSTITUTE OF SCIENCE & TECHNOLOGY

(Under Section 3 of UGC Act, 1956)

BONAFIDE CERTIFICATE

Certified that this project report titled **"DESIGN AND ANALYSIS OF SOLAR THERMAL PROPULSION SYSTEM FOR SMALL SATELLITE"** is the bonafide work of "Kapil Dubey (RA1811019010126), Nichiren Gyal Gurung (RA1811019010096), Animesh Donikar (RA1811019010128)**",** who carried out the project work under my supervision. Certified further, that to the best of my knowledge the work reported herein does not form any other project report or dissertation based on which a degree or award was conferred on an earlier occasion on this or any other candidate.

SIGNATURE	**SIGNATURE**
GUIDE Assistant Professor Aerospace Department	**HEAD OF THE DEPARTMENT** Aerospace
Signature of the Internal Examiner	Signature of the External Examiner

Abstract- *Small satellites that have increased capability in terms of thrust and weight are in demand for future missions. Sun being a vast source of energy has been used to heat a propellant at a very high temperature using indirect methods of solar radiation absorption. The thermal energy that is stored in the cavity is converted to kinetic energy as the working fluid exits the nozzle, resulting in a thrust with a high specific impulse (ISp). This system consists of a lens/converging mirror to focus the radiation on a heat exchanger which in turn transfers the heat to propellant ultimately causing combustion and generating thrust. The ultimate aim of the project is to give a suitable and economically feasible design for interplanetary exploration and maneuver. This paper studies a design for a solar thermal propulsion system which includes a lens coupled with a RAC (receiver absorber cavity) which will generate enough heat to support small satellites. This system is designed to be less in weight and with higher specific impulse. It has clear advantages over chemical and electric propulsion such as throttability, re-start capabilities, and faster transfer times. This design has been investigated and worked upon in various design parameters, such as propellant temperature, heat transfer and thrusts. Apart from the design parameters and analysis, two propellants have been selected and worked upon in order to compare the thrusts produced between the two. Hydrogen and argon have been chosen as the propellants in the experiment, both being used in interplanetary missions for small scale satellites already. The heaviest components of the system are the RAC, Nozzle setup, and propellant with respect to the gross mass of the satellite.*

Keywords- Solar system, interplanetary mission, microsatellite, propellant

TABLE OF CONTENTS

S no.	Chapter Title	Page No.
1.	Introduction 1.1 General 1.2 Need for solar thermal propulsion system	5
2.	Literature Review	6
3.	Objective and Methodology 3.1 Concept 3.2 Components	7
4.	Material and properties 4.1 Material selection 4.2 Propellant selection	10
5.	Design Analysis 5.1 Part Modeling 5.2 Simulation 5.3 Design calculations	11
6.	Results 6.1 Model Validation results	15

7.		

1 INTRODUCTION

1.1 General

The concept of a Solar thermal propulsion system (SPT) is similar to an electro-thermal propulsion system wherein the heating of the propellant occurs either due to direct or indirect absorption. In this concept, the gas is first transferred from the tank to a cylindrical service tank/buffer tank which is placed in the focal line of a concave mirror. The thruster can be used for orbit transfer, attitude control, and interplanetary transfer and is capable of a high level of performance (<1000s Isp). The objective of the project is to identify the propellants which will be most suitable for solar thermal propulsion. Design and analysis will be conducted using modeling and simulation namely SolidWorks and Ansys fluent, the ultimate goal of a solar thermal system can be for orbit transfer, attitude control, and interplanetary transfer. The project will consist of a lens which will be used to focus solar rays into a cavity, behind which, the propellant will be flown. A parabolic lens with a focal length of 15cm is being used for the most concentration in the conical cavity. Material Selection : For materials, Brass is used as a major component for the nozzle, having high thermal conductivity and low specific heat. Brass : Conductivity – 96W/m-C, Density - 8.73 g/cm^3 Specific Heat - 375 (J/kg-C). Alongside Brass, Aluminum, Steel, Iron, Magnesium and some other materials will be used as well. The image given below does not show the exact representation of the model designed but shows how the model will be implemented in a real world scenario.

Fig 1.1 Nozzle lens setup (blender)

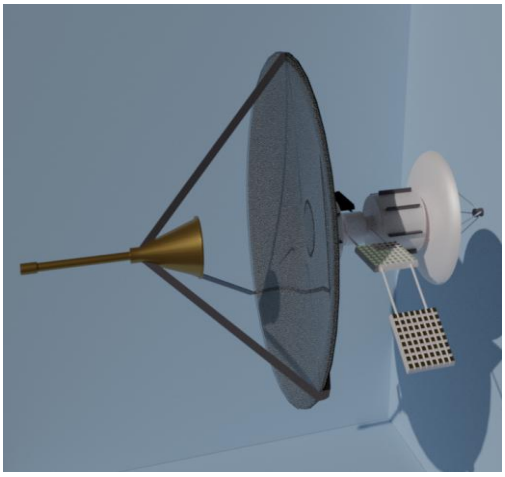

Fig 1.2 Model implementation (blender)

1.2 Need for Solar propulsion system

The system powered by solar propulsion provides very high fuel efficiency as compared to other forms of the propulsion system and is, therefore, best suited for space missions above low earth orbit. It also reduces the amount of propellant required for deep space missions by near about 90%. Moreover, small satellites equipped with this type of propulsion system are better suited for telluric planetary exploration as they are in closer proximity to the host star (Sun) and study their atmospheric composition. Besides STP (Solar Thermal propulsion)can also be used for orbit transfers of big communication satellites from low geosynchronous earth orbits. Its use for interplanetary missions are of great economic importance. In this type of missions large concave mirrors can be used to focus the solar radiation accurately on to the receiver cavity absorber then the heat form the radiation can directly be transferred to propellant creating a continuous source of thrust that powers the system.This method has a high efficiency of conversion of solar radiation to propulsive energy. Several comparisons have been made between conventional forms of propulsion systems and solar thermal propulsion systems and that has shown us a larger amount of payload can be carried just by using solar thermal propulsion systems. The example being the Pluto flyby mission by new horizon spacecraft in which it flew and passed through by the dwarf planet Pluto and its moons on july14th 2015. These successful missions gave us the first ever clear picture of Pluto's surface and its moons.

1.3 Pros and cons of solar thermal propulsion systems.

Advantages	Disadvantages
● Provides continuous source of thrust	● In order to provide continuous thrust it has to be synchronised with sun
● Suitable for carrying extra/heavy payloads	● It cannot function near a planet when the planet is in transit.
● It is has high efficiency and thus being highly economical	● The cost of setting up the mirrors is high
● Best for interplanetary missions	● Cannot be used to explore celestial objects beyond kuiper's belt or the oort cloud.

2 LITERATURE REVIEW

Spacecraft propulsion is a method used to accelerate spacecraft and artificial satellites. In-space propulsion generally deals with propulsion systems used in the vacuum of space or outside the atmosphere.Several methods of spacecraft propulsion has been developed having its own pros and cons. Most satellites have simple reliable chemical thrusters, and mostly interplanetary vehicles use chemical thrusters.(Meyer, Mike (April 2012). "In-space propulsion systems roadmap". nasa.gov. p. 9. Retrieved Feb 1, 2021.)

Solar electric propulsion or SEP consists of solar panels laid on the surface of spacecraft in order to recieve solar radiation and one or more electric thrusters . There are many different types of electric thrusters, including Solar ion thruster. Solar Electric Propulsion has a significantly higher specific impulse than normal chemical rockets, which allow it to function with much less propellant mass to be launched with a spacecraft ultimately helping to carry the extra payload thus being the need of the hour.(Hack, Kurt J"Solar Electric Propulsion for Mars Exploration". NASA. 1 April 1998. Retrieved 28 March 2021)

The Solar thermal propulsion is a type of spacecraft propulsion system that would make use of solar power to directly heat reaction mass, and therefore would not require an electrical thrusters, like solar ion thrusters .It consists of concentrating mirror that concentrate the solar radiated heat directly to heat the propellant that is fed for combustion and thrust generation. There are generally 2 types of solar thermal propulsion systems, namely direct and indirect. As the name suggests in direct form the propellant is directly heated from solar radiation and

in indirect the propellant goes through heat exchanger that is heated by solar radiated heat. This type of propulsion system has longer life, lower cost, uses solar energy more efficiently and is most flexible cryogenically. ("Solar Thermal Propulsion for Small Spacecraft" - Engineering System Development and Evaluation PSI-SR-1228 publisher AIAA July 2005)

F.. Leverone, A. Cervone, M. Pini, E. Gill *'Design and Characterization of a Bi-modal Solar Thermal Propulsion and Power System for Small Satellites'* S1359-4311(21)00065-XA research paper published by STRAUSS" project, grant no. 130/201 was done on the type of combined solar–thermal/cold gas propulsion system used for the LEO satellite's attitude control. The study found that the temperature of 450°C is the temperature that the propellant tank reaches in space when its heating is carried out by the mirror.

Sarah L. Nothnagel (2011) **"***Development of a Cold Gas Propulsion System for the Talarishopper*", Internal Contract Project No. 25111 at Draper Laboratory A study done on solar steam propulsion arrived at a conclusion saying that solar energy can be absorbed with 99 % efficiency on carbon nanoparticle-coated surfaces. It showed that covering the surface with Vanta Black or Darkest the black can result in absorption of 99% of the solar rays. It said the Solar propulsion system is simple, contains minimal moving parts, and shows performance comparable to mono and bi-propellant propulsion systems.

Sercel, JC "*Solar thermal propulsion for planetary satellites*" OSTI no. 5766197 This paper concluded that the mass of the propellant is approximately 40 to 50% of total mass of the small satellite, taking the gross mass of the satellite to 400 to 500 kgs, which is suitable for a micro or small scale satellite.

Salil Rabade, Nathan Barba, Gavin Liu, Laurence Garvie, Jekanthan Thangavelautham "*Case for Solar Thermal Steam Propulsion System for Interplanetary Travel*" Enabling Simplified International Astronautical Congress 2016At By using a solar thermal system, the operational life of an LEO satellite increases 2.73 times. The maximum thrust force is 8 N when the valve opening time is 0.4 s. The linear parabolic mirror destined for space is better composed of two symmetrical parts which unfold to make a bigger overall mirror, which is silver plated. The research showed that the integrated solar thermal system is suitable for satellites that have a gross mass of 400 kg or 500 kg and the propellant mass accounts for 40 to 50% of the total mass fraction for the mini-satellites.

One of the 2 papers contradicted the ideas of traveling into inner space by saying they're high thrust systems while the other said they cannot carry the weight for interplanetary missions.

3 OBJECTIVE AND METHODOLOGY

3.1 Objective

The goal is to determine the optimal propellant for solar propulsion by mixing Hydrogen and Argon with air under various mass flow rate circumstances. It will be carried out using a direct-type solar thermal propulsion system (STP), which implies that solar light will be used directly to propel the vehicle. The objective is to find the best suited propellant for solar propulsion between Hydrogen and Argon with air on different conditions of mass flow rate. The Solar propulsion system is the need of the hour for interstellar probe development and designing something that uses solar energy.

3.2 Methodology

The experiment will be done in a software based environment. The Nozzle was designed as individual components and assembled later. The simulation was done in Ansys fluent. Due to it being a student version, the simulation for it was not accurate and hence the results are not included in the report, instead, 2D simulation is taken into account and values are calculated for the same.

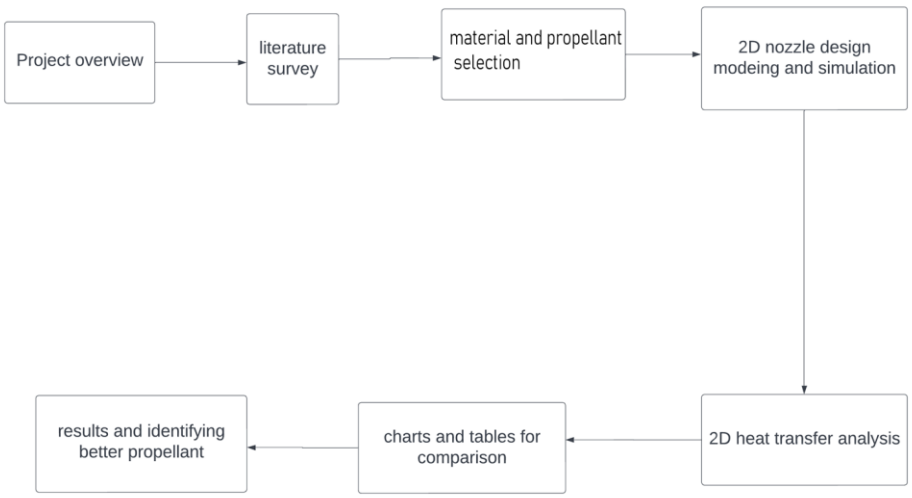

Fig. 3.1 Process flow chart

3.2.1 SOLAR THRUSTER COMPONENTS

DES-

3.2.2.1 Nozzle RAC (Receiver absorber cavity)

The receiver absorber cavity or RAC is the heat exchanger in the form of a cone, it absorbs the sunlight and transfers it to the propellant in order to produce thrust. RAC has 2 cavities, inner and outer, between which the propellant will be flown at a certain mass flow rate. Sunlight is converged with the help of a lens and is directly hit at the RAC which inturn heats the propellant through heat transfer. The propellant when heated will produce combustion and will thus accelerate the system, in this case, a small satellite.

The gases will then be released through the nozzle thereby producing required thrust. The idea of using the RAC with a lens is given in the diagram below.

To allow for the use of readily available materials, temperature of the propellant is limited to a maximum of T = 1000 K. The receiver is to be designed to allow the light to be received from a direction perpendicular to the axis of the thrust. This is in agreement with most other such thruster concepts currently under study in the world.

The cavity will have the following layouts :

- Cylindrical without cavity
- Cylindrical with cavity
- Conical with cavity

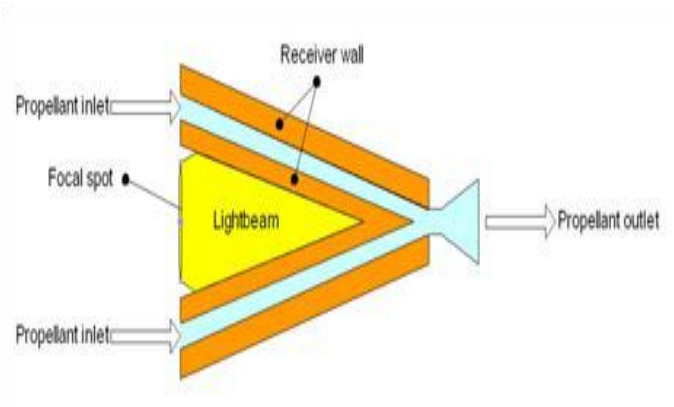

Fig 3.1 – 3 Conical section with cavity (10.1109/AERO47225.2020.9172499 2020)

3.2.2.2 Solar concentrator

The solar concentrator is a concave mirror which will reflect the sunlight onto the RAC cavity. The sun being an infinite source of heat and light will provide the nozzle to be heated throughout the combustion process, just the amount of propellant entering has to be monitored. The size of the mirror could be taken as a parabola to maximize the amount of sunlight entering through it. The mirror must be placed opposite to the nozzle and preferably in synchrony to the sun for it to be reflecting light throughout. A diagram for the concave mirror is given below. The mirror will be used to reflect sunlight into the concentrator when the spacecraft is heading away from the sun. In order to maximize the light to concentrate on the nozzle, the use of a parabolic mirror would be useful as it could focus the light directly inside the cavity.

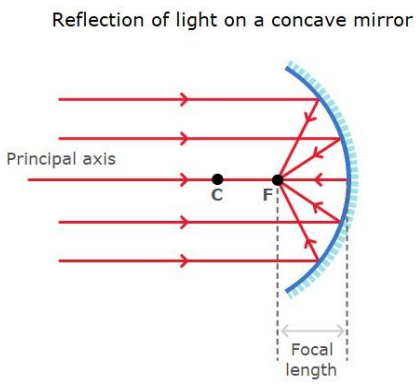

Fig 3.2 – Solar collector (sciencelearn.org.nz)

4 MATERIALS AND PROPERTIES

The design will consist of two major components, the nozzle and propellant. Nozzle is to be made from a metal having certain properties, and propellant will also be selected with certain requirements. The materials will be exposed to high temperatures and pressures. The propellant will be present between two cavities and thus needs to be properly filled and maintained. Individual component selection is given below.

4.1 Nozzle material selection

The ideal material used for the solar thermal propulsion system must have a certain level of parameters to be used in the project, such as high thermal conductivity and low specific heat. It should be of low cost and easy to fabricate. The reason it should be of high thermal conductivity is so that more heat passes through the material. Lower the specific heat, the lesser time it takes for the material to heat up to the required temperature. Brass was used as a material of choice for this experiment, since it is a good thermal conductor and can be compared with copper if the same experiment is done with both.

Properties of Brass

1.	Conductivity	96 W/m-C
2.	Density	8700 kg/m3
3.	Specific Heat	375 J/kg-C

Table 4.1 Brass Properties

4.2 PROPELLANT SELECTION

Two propellants namely hydrogen and argon were considered for the experiment, they were selected after looking at the parameters such as thermal conductivity, specific heat capacity and specific impulse. Nitrogen was omitted since more dangerous propellants could be used in a software based experiment, so hydrogen and argon were selected to be compared in terms of thrust at different mass flow rates.

Propellant	Molecular weight	Specific heat
Hydrogen	1.00784 U	0.312 J/kg-C
Argon	39.94 U	14.98 J/kg-C

Table 4.2 Propellant properties

5 DESIGN OF NOZZLE

DES -

5.1 Nozzle modeling and assembly

The RAC or in the model (inner cavity) will be the one receiving the solar heat and transferring it to the propellant. The propellant will be flown between the inner and outer cavity. The heat transferred from the inner cavity will then expand the gases, producing thrust at a high amount. No material was assigned to the model. The document was saved to .part and was imported to ansys for simulation. The 3d modeling for the nozzle was done in fusion 360 software and individual components were made and assembled.

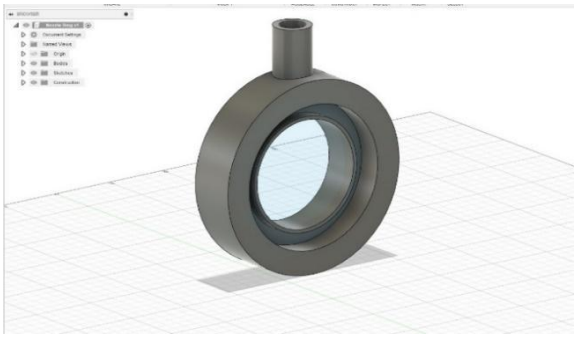

Ring

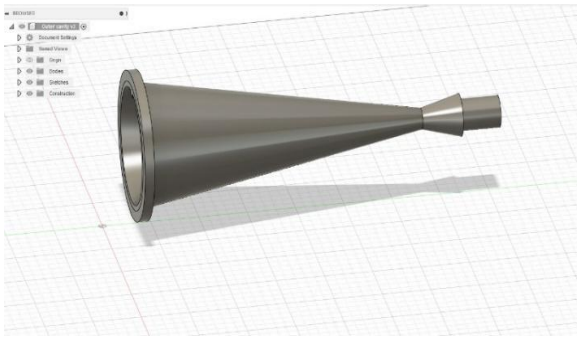

Outer Cavity

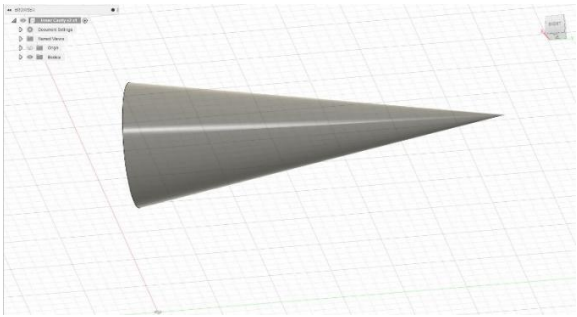

Inner Cavity

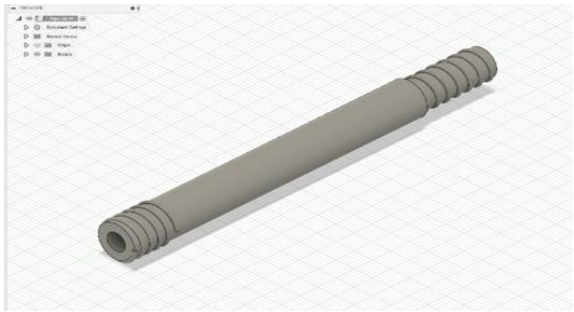

Pipe

Fig 5.1 – Part modeling

- Nozzle complete length – 200 mm
- Maximum radius – 80 mm
- Inner cavity radius – 60 mm
- Inner pipe diameter – 1 mm
- Convergent pipe diameter – 1 mm

Table 5.2 Dimensions and properties

5.1.2 Nozzle Assembly

The model was made using 4 individual components namely front ring, inner cavity, outer cavity and the pipe. The transparent or see-through view of the model shows how the model's inner cavity will be implemented to the concave mirror and the light will hit the cavity.

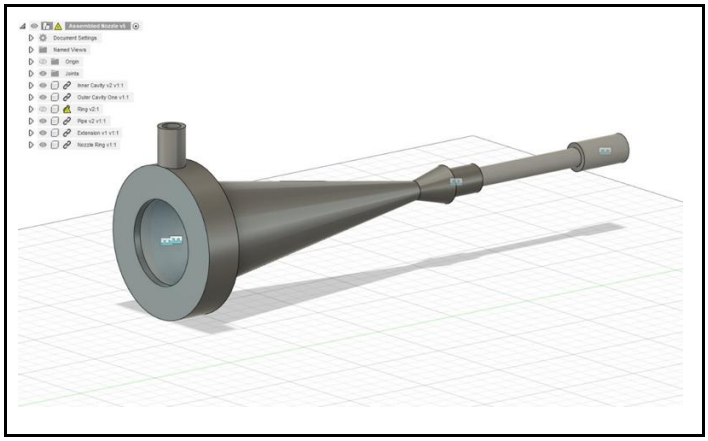

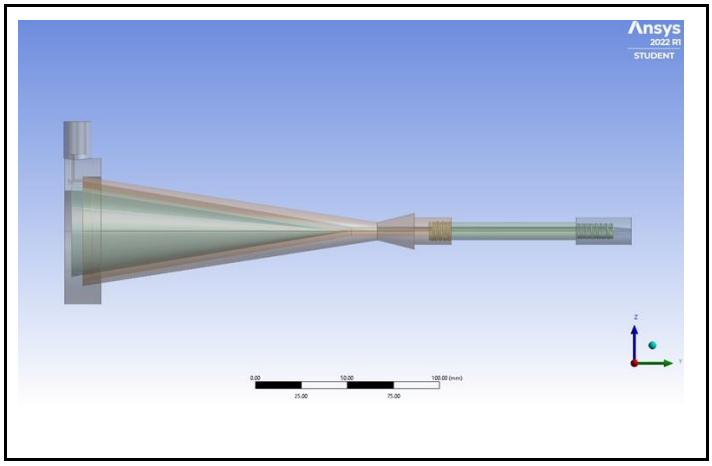

Fig 5.2 – Nozzle assembly

5.2 Meshing

The experimentation had several issues regarding simulation and limitation for a 3D design, hence the model was discarded and a 2D model was used instead. The model was made in solidworks 2019 and meshing was done in Ansys Fluent. The details of the mesh are given below:

S no.	Parameters	Dimensions
1.	Length	3 cm
2	Width	3cm
3	Nodes	10779
4.	Elements	10483

Table 5.1 Mesh Data

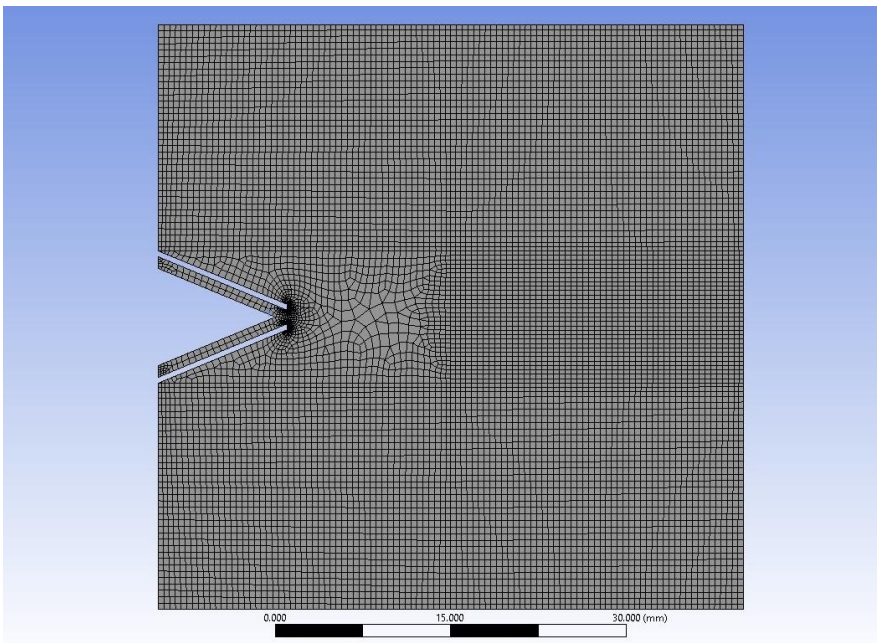

Fig 5.4 – Nozzle 2D meshing

design calc

5.2.1 Heat transfer analysis

des

assum

boundary cond

The heat transfer analysis was done for the RAC or receiver absorber cavity in Ansys steady state heat transfer. The flow was not considered in the analysis and the cavity was joined as if the heat is being flown through the inner and outer cavity seamlessly.

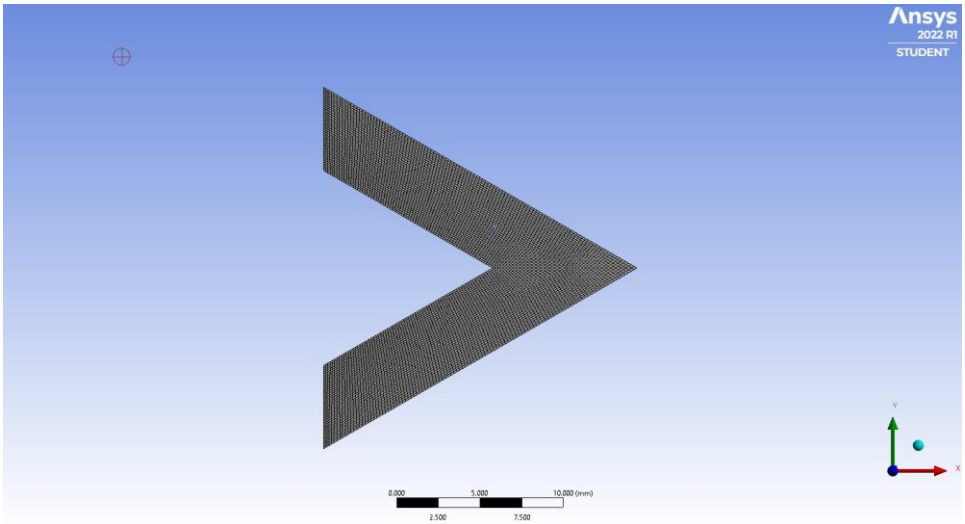

Fig 5.3 – RAC meshing 2D

S no.	Parameters	Dimensions
1.	Length	1 cm
2	Width	1 cm
3	Nodes	10163
4.	Elements	9761

Table 5.2 Mesh Data (heat transfer analysis)

5.3 DESIGN CALCULATIONS

assumptions for analysis

5.3.1 Fluent Setup

assumptions for analysis

Boundary conditions

- Solver = density based
- Nozzle = mass flow rate
- Pressure = 2bar
- Wall temperature = 300K
- Inner cavity temperature (max) = 1000K
- Inlet = mass flow inlet
- Outlet = pressure outlet
- Iterations = 100/500/1000
- Velocity contours were calculated

5.3.2 Steady state heat transfer setup

- Geometry was imported from solidworks.
- Material was changed from aluminum to brass C37700.
- Meshing was done for the 2d model
- Naming selection was done as RAC and insulation.
- Initial temperature was set as 1000K.
- The boundary was selected as convection heat transfer.
- Insulation was given at all other openings.
- Model was solved for convection and heat flux.

6 RESULTS AND DISCUSSION

PARA DES

6.1 Velocity Flow contours

6.1.1 Argon vel flow contour

des-

Mass flow rate (kg/s)	Velocity (m/s)	Temperature (K)
0.2 kg/s	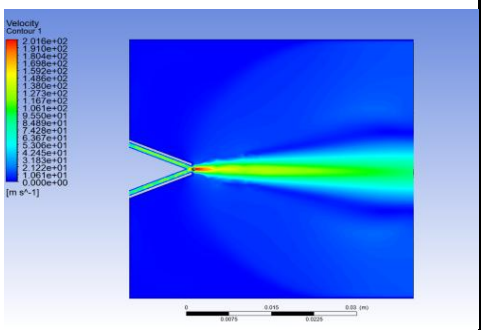	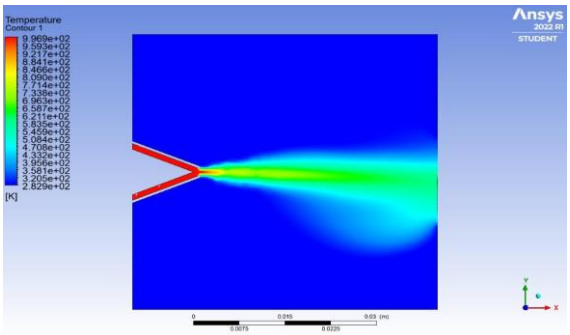
0.4 kg/s	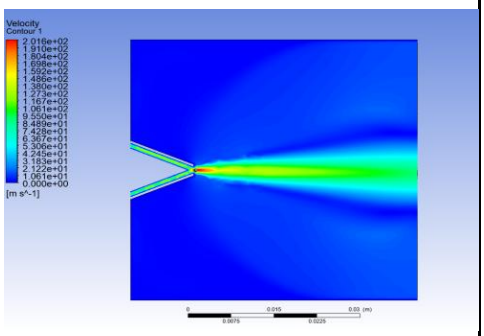	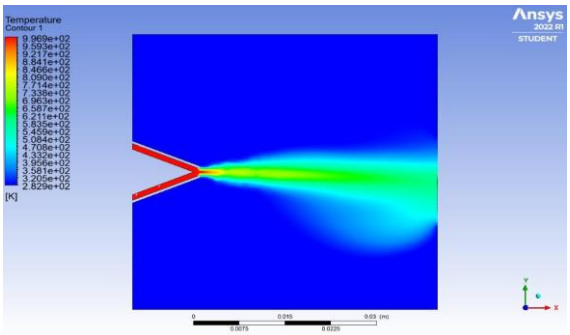
0.6 kg/s	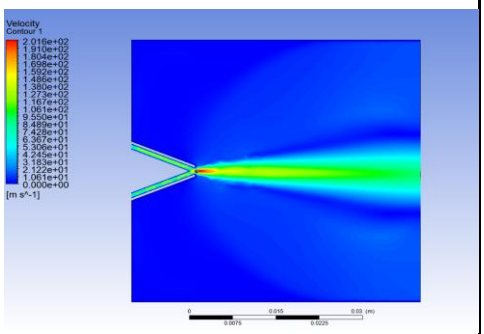	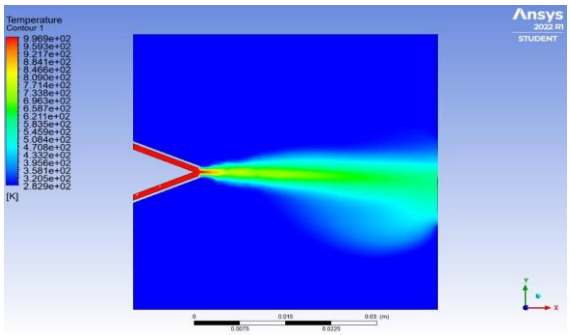

Table 6.1 - Argon temperature and velocity

6.1.2 Flow contours (Hydrogen)

Mass flow rate (kg/s)	Velocity (m/s)	Temperature (K)
0.2 kg/s	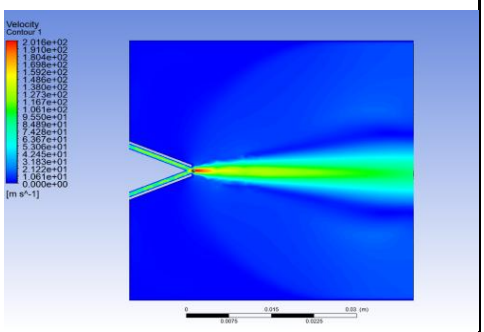	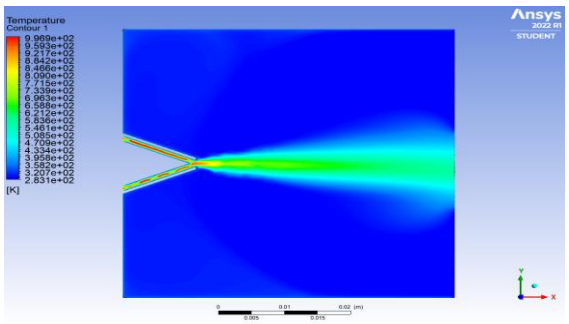
0.4 kg/s	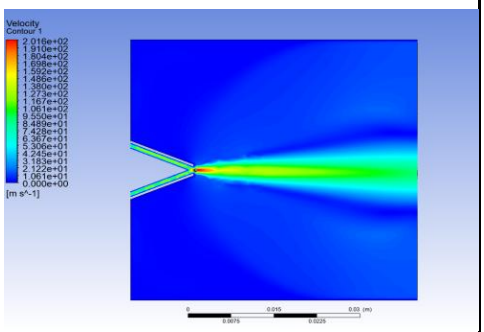	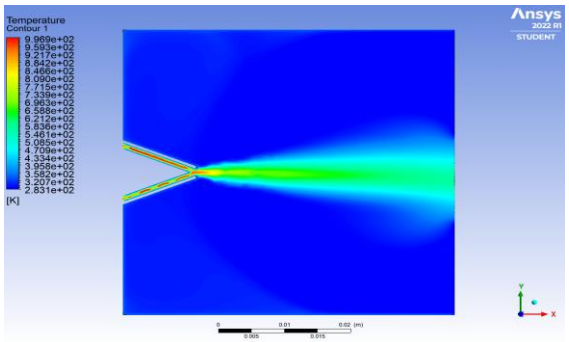
0.6 kg/s	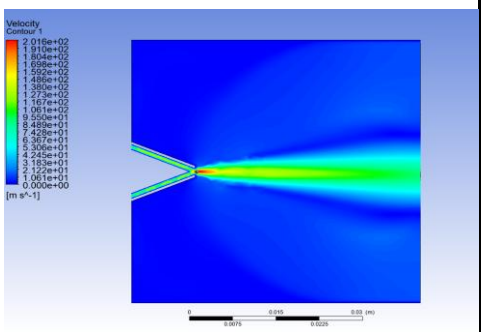	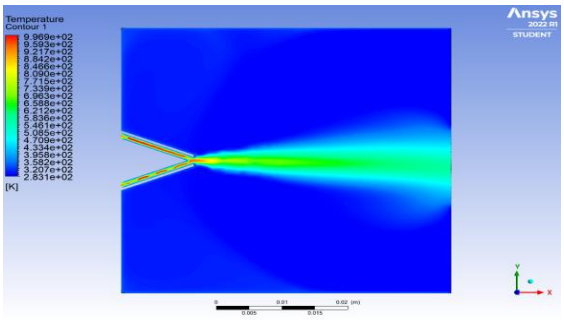

Table 6.2 - Hydrogen temperature and velocity

6.1.3 Heat transfer analysis

diss-

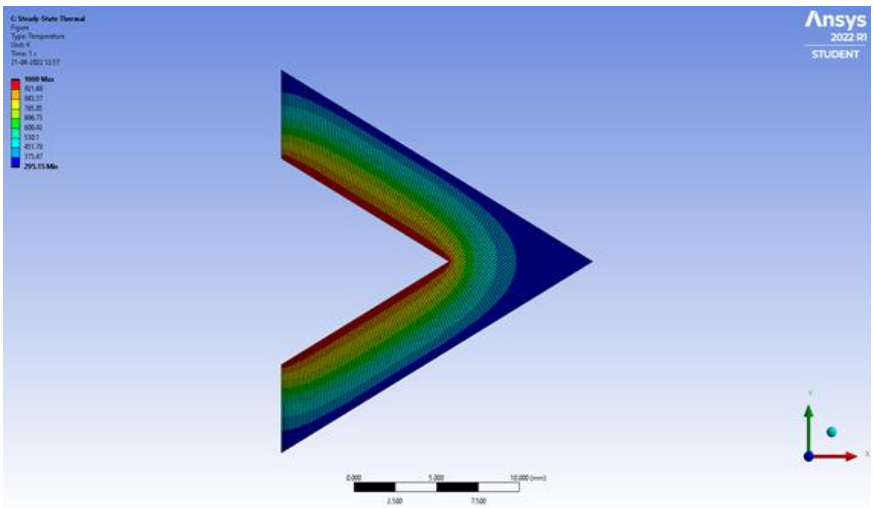

Figure 6.1 - heat transfer through RAC

6.2 Results and Discussion

The nozzle is one of the largest and most important parts of the system so it is important to ensure the sizing is properly modeled. Table 6.3 and 6.4 shows individual thrust values for argon and hydrogen. The results for velocity contours were calculated based on the iterations in Ansys fluent. Mass flow rate was varied and calculated for fluid flow material and hydrogen and argon. The results were compared and the better propellant was selected for the operations. It is clear from the tables that hydrogen is an overall better propellant than Argon. Due to its lower molecular weight, hydrogen gas manages to gain higher specific impulses and thus is a better choice. Chart 6.1 and 6.2 shows how the curve changes when certain thrust is put against the mass flow rate, in this case, argon and hydrogen. It can be argued that since the temperature peaked at 1000K, argon couldn't reach its maximum level of thrust as argon usually gives out a decent amount of thrust at above 3000K. But since the sunlight won't be hitting the RAC for

more than a 1000K, hydrogen would be a better option unless a vanta black substance is coated on the RAC making it absorb 99% of the heat passed through the concave mirror.

6.2.1 Thrust calculation (Argon)

Sno	Mass flow rate Kg/s	Velocity m/s	Thrust N
1	0.2	107.91	21.58
2	0.4	215.86	86.34
3	0.6	323.57	194.16
4	0.8	430.12	344.10

Table 6.3. Thrust (Argon)

6.2.2 Thrust calculation (Hydrogen)

Sno.	Mass flow rate Kg/s	Velocity m/s	Thrust N
1	0.2	158.56	31.71
2	0.4	317.57	127.03
3	0.6	463.05	277.83
4	0.8	534.83	427.86

Table 6.4. Thrust calculation for Hydrogen

6.2.3 Thrust vs Mass flow rate (Argon)

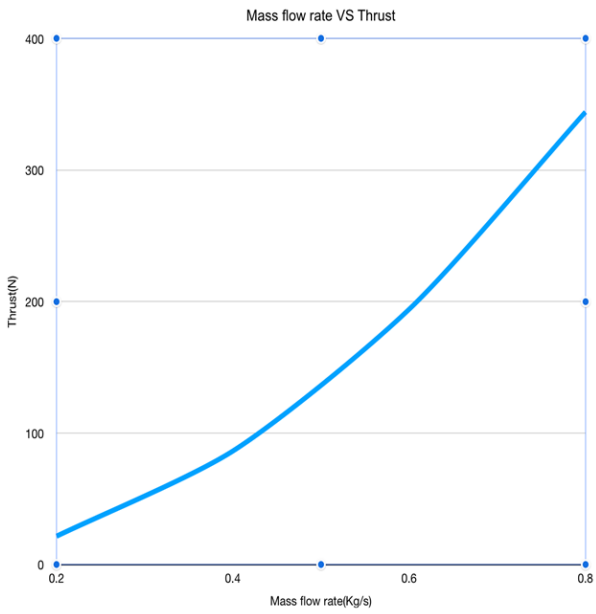

Fig 6.1 Thrust vs mass flow rate (Argon)

6.2.4 - Thrust vs Mass flow rate (Hydrogen)

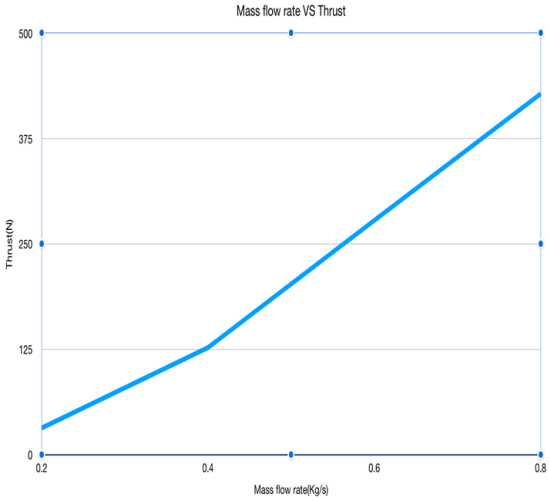

Fig 6.2. Thrust vs mass flow rate (Hydrogen)

6.2.5 Heat Transfer Analysis

The figure shows the analysis of the RAC. No heat transfer due to loss through radiation is shown. Only the convection that occurs at the inner cavity wall and at the insulated outer wall is calculated. Not shown in the figure are the power needed to heat up the RAC and conduction heat loss via the thruster mounts. The only conduction that is taken into account is the conduction through the insulation material.

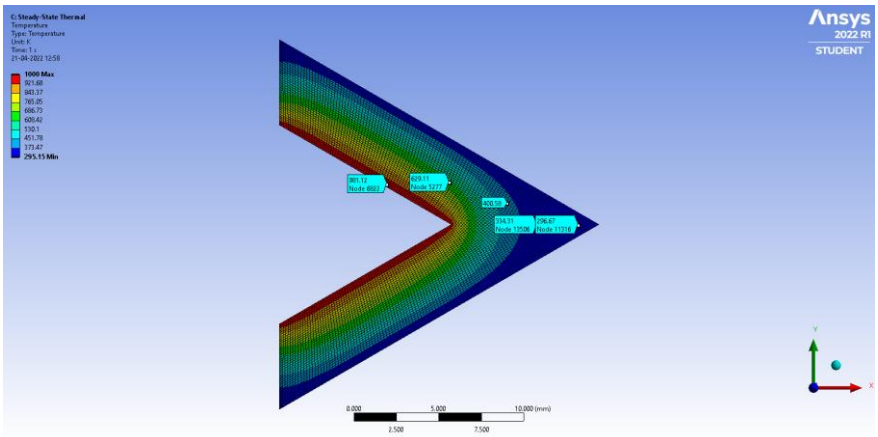

Fig 6.2 Values for heat transfer

6.3 CONCLUSION

The experiment was done in 2 phases, Design analysis and comparison between 2 given propellants. In this project we have selected suitable material for nozzles namely Brass C37700 and a suitable propellant amongst two different propellant that is Argon and Hydrogen. We structured the design of nozzles that can be used for solar thermal propulsion systems and have analysed the flow contour of velocity and temperature.The results for velocity contours were calculated based on the iterations in Ansys fluent. Mass flow rate was varied and calculated for fluid flow material and hydrogen and argon. The results were compared and through which we found that Hydrogen clearly had higher velocity flow and compared to Argon. The results being that Argon had a velocity of 323.57 m/s at the mass flow rate of 0.6 Kg/s and Hydrogen had a velocity of 463.05 m/s with a mass flow rate of 0.6 Kg/s. Future addition of experimentation can be done on the basis of moving mirrors or movable panels attached on the mirror, as it will allow the satellite to move freely without being constrained to the sun synchronous path. Also, applying a Vanta black surface on the RAC might improve the performance of the satellite as the blacks absorbs 99% of the heat thus improving the values of thrust.

Comparing the results of flow contour of Hydrogen and Argon thrust was calculated which clearly shows that Hydrogen had a greater amount of Thrust produced for a given mass flow rate.

Sno	Thrust (Hydrogen) N	Thrust (Argon) N
1	31.71	21.58
2	127.03	86.34
3	277.83	194.16
4	427.86	344.10

Table 6.5 Thrust Comparison of Argon and Hydrogen

This clearly shows that Hydrogen is a better propellant as compared to Argon as it has higher Thrust than Argon for the same mass flow rate.

The Heat transfer analysis for the Receiver Absorber Cavity or RAC was done without the flow. Material was used as brass C37700 Ansys steady state heat transfer was used for the calculation. The final value was found to be Tw = 405.77K.

REFERENCES

1. F. Leverone, A. Cervone, M. Pini, E. Gill *'Design and Characterization of a Bi-modal Solar Thermal Propulsion and Power System for Small Satellites*' S1359-4311(21)00065-X.
2. Salil Rabade, Nathan Barba, Gavin Liu, Laurence Garvie, Jekanthan Thangavelautham "*Case for Solar Thermal Steam Propulsion System for Interplanetary Travel*" Enabling Simplified International Astronautical Congress 2016At
3. Mookesh Dhanasar, William Edmonson, Frederick Ferguson "*Small Satellite Solar Thermal Propulsion System Design: An Engineering Model*" DOI: 10.2514/6.2014-1729
4. Takashi Nakamura Robert H. KrechJames A. McClanahan "*Solar Thermal Propulsion for Small Spacecraft - Engineering System Development and Evaluation*" DOI: 10.2514/6.2005-3923
5. R. W. Lyman, M. E. Ewing, R. S. Krishnan, D. M. Lester Thiokol Propulsion "*Solar Thermal Propulsion for an Interstellar Probe*" AIAA 2001-3377
6. Leverone, Fiona; Cervone, Angelo; Pini, Matteo; Gill, Eberhard "*Design of a Solar Thermal Propulsion and Power System for Mini-satellite Lunar Orbit Insertion*" DOI 10.1109/AERO47225.2020.9172499
7. Sercel, JC "*Solar thermal propulsion for planetary satellites*" OSTI no. 5766197
8. Sarah L. Nothnagel (2011) Development of a Cold Gas Propulsion System for the Talarishopper, *Internal Contract Project No. 25111 at Draper Laboratory.*
9. Constantin Sandhu, Valentin Silivestru, Grigore Cican , Horatiu Șerbescu, Traian Tipa , Andrei Totu · Andrei Radu *"On a New Type of Combined Solar–Thermal/Cold Gas Propulsion System Used for LEO Satellite's Attitude Control STAR* "STRAUSS'' Project, Grant no. 130/2017, Project supported by the Romanian Minister of Research and Innovation.
10. Accettura, A., and Ferretti, A., "PROPULSION 2000 PROGRAM, Phrase 1," Final Rep., AVIO, Colleferro (Rome), Italy, NTEPRP 10000, Nov.

11. Claudio Bruno. "*Advanced Propulsion Systems and Technologies. Today to 2020*", American Institute of Aeronautics and Astronautics, Inc, 2008
12. Kauffmann, J., "*Solar Thermal Orbital Transfer Stage Study, Mission Analysis*," DLR Cologne, 2002
13. "NN: *EADS-LV Executive Summary STOTS*," ESA-ESTEC, Sept 2002
14. E. M. Goodger. *"Principles of Spaceflights Propulsion"*. Pergamon Press, 1970

$Qin = Qrac + Qrad + Qcond + Qconv + Qprop$

$Qrad = \varepsilon\sigma FA(Tw^4 - T\infty^4)$

$Ra = g\beta(Tw - T\infty)L^3 / Ku$

$Q_{in} = P\eta\alpha(1 + F_{1-1})$

$Qconv = NukA(Tw - T\infty)/L$

$F_t = \dot{m} \times v$